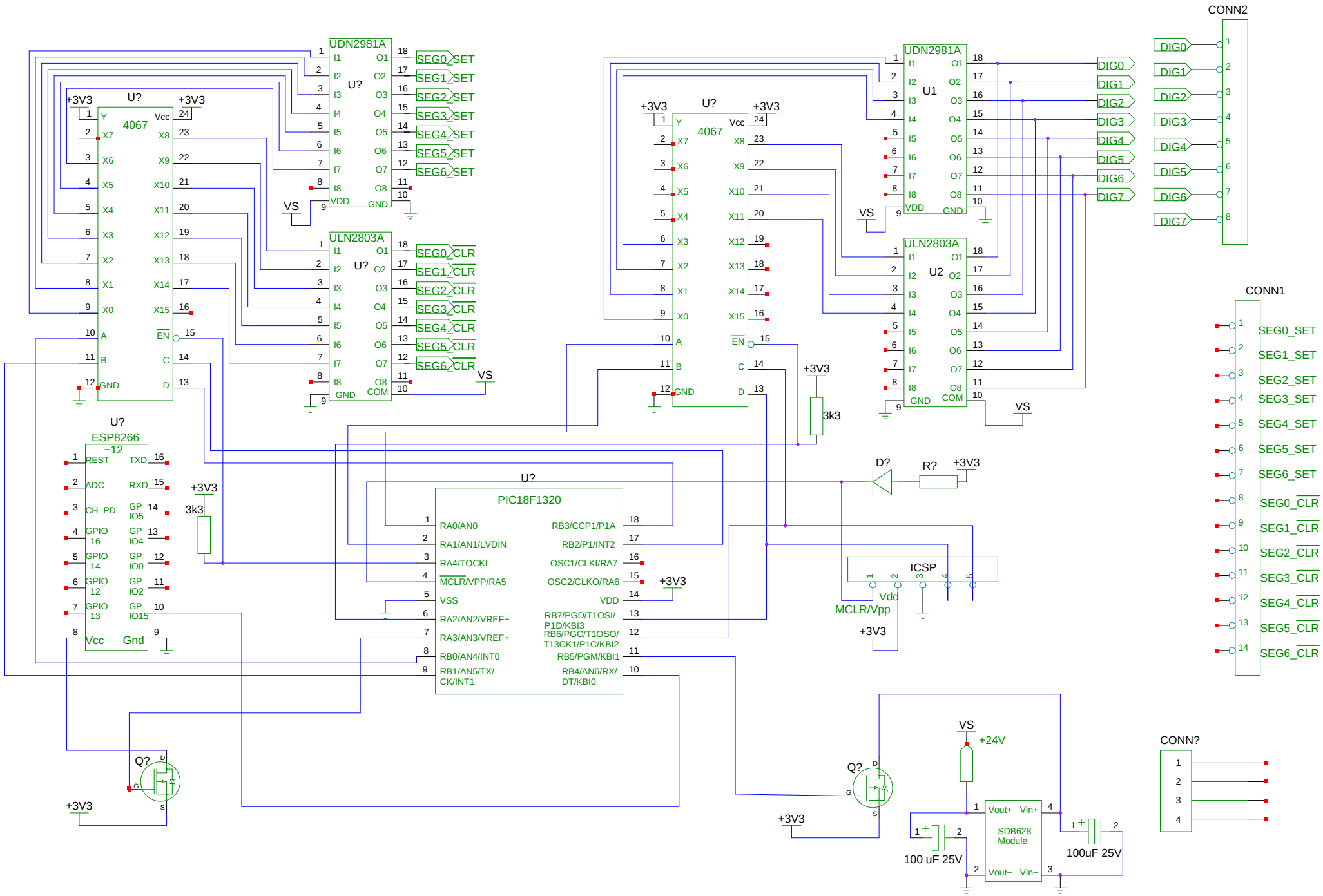
UDN2981A
U?
SEG0_SET
SEG1_SET
SEG2_SET
SEG3_SET
SEG4_SET
SEG5_SET
SEG6_SET
ULN2803A
SEG0_CLR
SEG1_CLR
SEG2_CLR
SEG3_CLR
SEG4_CLR
SEG5_CLR
SEG6_CLR
4067
+3V3
VS
U1
U2
DIG0
DIG1
DIG2
DIG3
DIG4
DIG5
DIG6
DIG7
CONN2
CONN1
ESP8266
-12
REST
ADC
CH_PD
GPIO 16
GPIO 14
GPIO 12
GPIO 13
TXD
RXD
GP IO5
GP IO4
GP IO0
GP IO2
GP IO15
Vcc
Gnd
3k3
PIC18F1320
RA0/AN0
RA1/AN1/LVDIN
RA4/TOCKI
MCLR/VPP/RA5
VSS
RA2/AN2/VREF−
RA3/AN3/VREF+
RB0/AN4/INT0
RB1/AN5/TX/CK/INT1
RB3/CCP1/P1A
RB2/P1/INT2
OSC1/CLKI/RA7
OSC2/CLKO/RA6
VDD
RB7/PGD/T1OSI/P1D/KBI3
RB6/PGC/T1OSO/T13CK1/P1C/KBI2
RB5/PGM/KBI1
RB4/AN6/RX/DT/KBI0
D?
R?
ICSP
Vdd
MCLR/Vpp
Q?
+24V
SDB628 Module
Vout+
Vin+
Vout−
Vin−
100 uF 25V
100uF 25V
CONN?